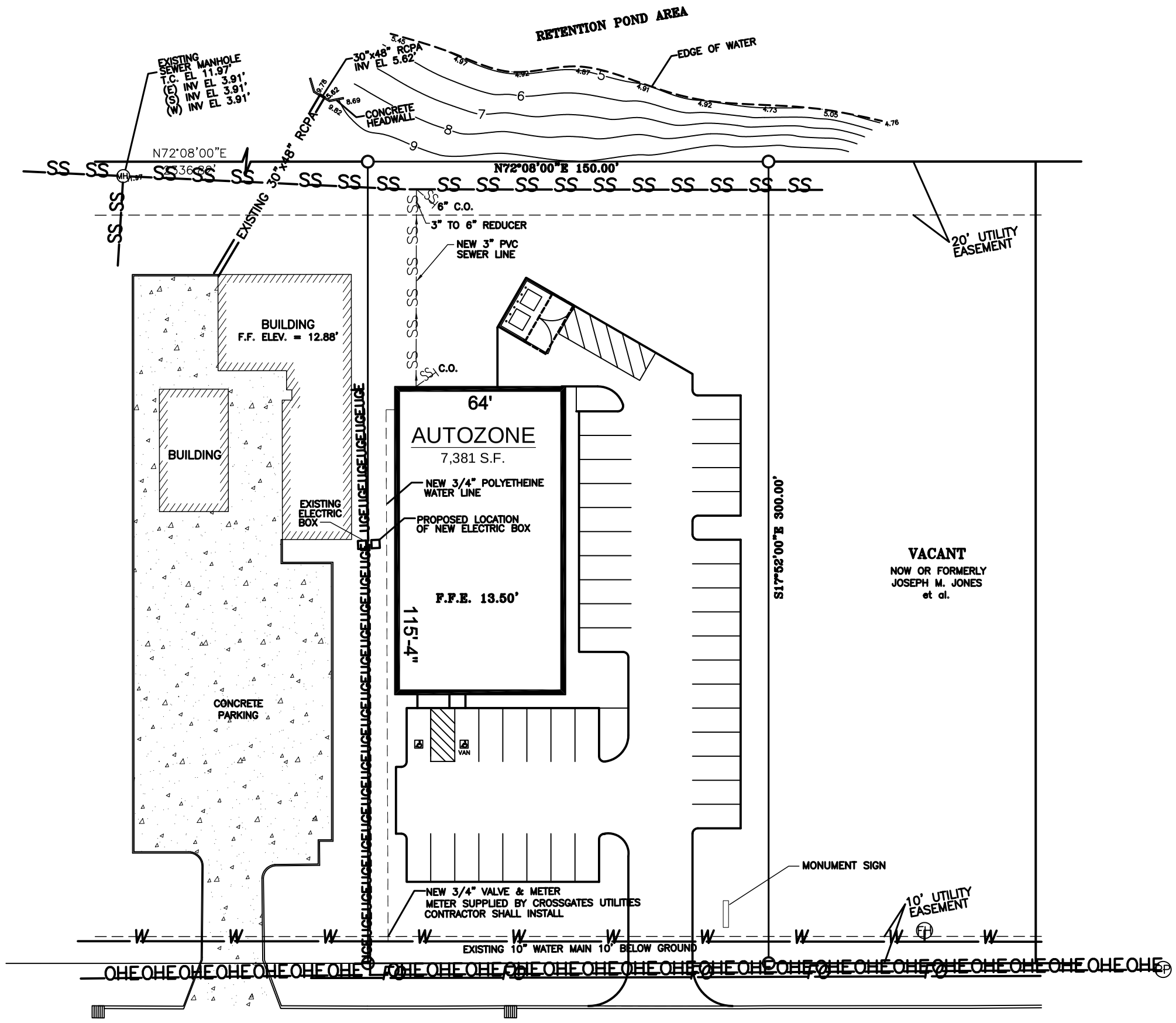

SITE PLAN
SCALE: 1"=20'-0"

NOTE:

NEW 3/4" VALVE & METER
METER SUPPLIED BY CROSSGATES UTILITIES
CONTRACTOR SHALL INSTALL
NOTIFY CROSSGATES UTILITIES PRIOR TO INSTALLATION

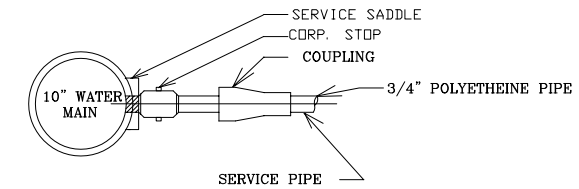

DETAIL OF SERVICE CONNECTION

FOR TAPS TO MAINS

SCALE: N.T.S

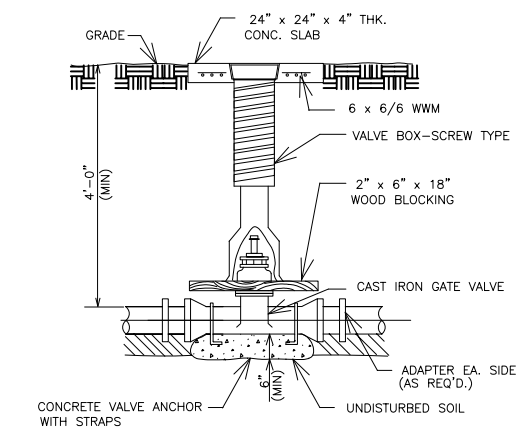

TYPICAL VALVE BOX DETAIL

SCALE: N.T.S

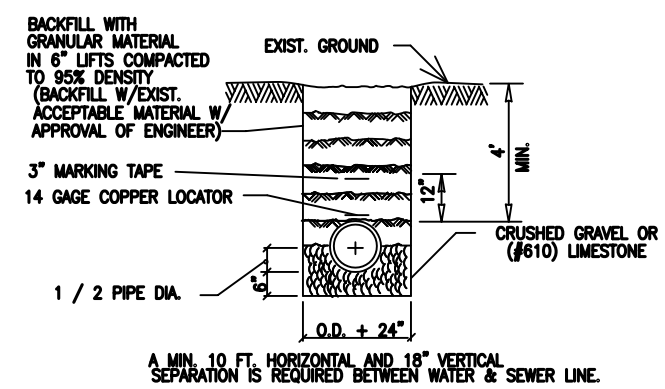

A MIN. 10 FT. HORIZONTAL AND 18" VERTICAL SEPARATION IS REQUIRED BETWEEN WATER & SEWER LINE.

PIPE BEDDING DETAIL FOR SEWER & WATER LINE

N.T.S.

SEWER & WATER PLAN

AUTO ZONE
GAUSE BLVD.
SLIDELL, LOUISIANA

AUTO ZONE

DAMMON ENGINEERING. INC.
1095 FLORIDA AVENUE 985-649-5832 SLIDELL, LA. 70458
DAMMONENGINEERING.COM

SCALE: 1"=20'
FILE:
JOB NO.1749
DATE:03-14-06
SHEET
C-1
OF